SINCE 1936 SnoWizard INC.
101 River Road New Orleans, LA 70121
800-366-9766 • 504-832-3901

0 14147 10164 3

Nobody beats the Wiz®

2026 PRICE LIST

Since 1936 - The Original New Orleans SnoBall Machine

SnoWizard SnoBall Machine® *with Polyethylene Drip Pan* $2,679.00

Includes: Operating Manual, Precision Blade Setting Gauge, 4 oz Tube Foodservice Grease, Drip Pan Hardware & Tool Pack, Lifetime Machine Warranty and 5-year motor Warranty. ETL approved for NSF and UL standards to meet sanitary and safety regulations in all 50 states.

Extra Polyethylene Drip Pan with molded drain	60.34
Extra Blades *(Stainless Steel/3 per set)*	47.03

A $50.00 crating charge is applied to each machine shipped by motor freight (all machines are shipped freight collect.) Crating charge does not apply to machines picked up at our dock.

Complete Start-up Packages

Budget Starter Package	$4,218.96
Recommended Starter Package	5,156.48
Super Starter Package	17,318.08

Prices on "Packages" change according to the cost of the individual items.

Icemakers

		Plastic Cans	St. Steel Cans
BM-900	9 block BLOCKMaster™ Ice-maker	$ 8,471.56	$ 8,471.56
BM-2000	20 block BLOCKMaster™ Ice-maker	11,806.12	11,806.12
BM-4200	40 block BLOCKMaster™ High-capacity	16,826.83	16,114.03
BM-4500	40 block BLOCKMaster™ Super high-capacity	19,359.03	20,410.63

All icemakers include propylene glycol and 5-year compressor warranty.

Ice Bags (Box of 500)	$48.50
Propylene Glycol – 5 gallon pail	256.14
Replacement Stainless Steel ice cans (for use with BLOCKMaster™ machines only)	126.36

To Order Call 1-800-366-9766

© Copyright 2007. SnoWizard®, Inc. 101 River Road New Orleans, LA 70121● 800-366-9766 ● www.snowizard.com

Snow Cone Machines

SnoWizard offers a complete line of traditional snow cone machines manufactured by Paragon. These machines have powerful motors, sturdy cabinets and attention getting graphics. We have four models to suit your needs.

The Artic Blast $722.31

A hard-working, economical option, the Artic Blast has tinted, high-impact polycarbonate side panels. Constructed of stainless steel and aluminum with a powder coat finish.

The Cooler $571.40

The Cooler has wheels and is made from rugged roto-cast polyethylene so it's lightweight and less expensive.

Cube & Rotational Shavers

Hatsuyki HC-8E $1,945.90
Hatsuyki HC-8E-DC 2,136.05

The HC-8E Cube Ice Shaver is the perfect choice for businesses that must use cubed ice. It produces shavings much finer than snow cone machines and closer to those of a horizontal block shaver. Available in AC and DC models.

Hatsuyki HC-S32A $1,506.60

This cube shaver is the successor to the model HC-6S. The S32A has a smaller hopper capacity and output than the HC-8E and is recommended for low volume operations and home use.

Hatsuyki HF-500E $2,590.10

These rotational shavers use small blocks of ice that rotate over a stationery blade and produce a curled shaving of snow popular with "shave ice" enthusiasts.

Soft-Serve Ice Cream

DF-200	Soft Serve Machine - *6 quart/115 Volts*	$7,637.68
Model 401	Soft Serve Machine - *20 quart/208-230 Volts*	12,581.46
Model 404	Soft Serve Machine - *20 quart/208-230 Volts*	13,104.65
Model 407	Soft Serve Machine - *10 quart/115 Volts or 220 Volts*	8,977.50
Model 408	Soft Serve Machine - *20 quart/115 Volts*	13,125.24
Model 501	Soft Serve Twin Twist - *11 quart/208-230 Volts*	22,001.76

An Additional Check-Train-Start (CTS) Fee of $375 is added to every machine. The CTS Fee is required to activate manufacturer's warranty. As of 01/24/23 – Delivery running time is 24-26 weeks.

We carry the complete line of SaniServ soft serve ice cream, yogurt and daiquiri machines.

To Order Call 1-800-366-9766

© Copyright 2007. SnoWizard®, Inc. 101 River Road New Orleans, LA 70121● 800-366-9766 ● www.snowizard.com

Plastic Ice Molds $26.01

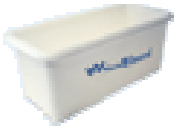

Polyethylene molds for freezing blocks of ice that fit perfectly into the SnoWizard® SnoBall Machine™. Recommended for low-volume operations, using less than 12 blocks per day. Blocks should freeze solid in 36 to 48 hours depending on temperature and the number of molds put into the freezer at one time. For best results, place molds in an upright freezer on shelves which allow the cold air to circulate around the mold for faster freezing time.

Acrylic Bottle Stands

24" Bottle Stand – Holds 21 to 28 bottles	$163.50
36" Bottle Stand – Holds 33 to 44 bottles	208.50

Heavy-duty acrylic bottle stands for displaying syrup serving bottles. Glass or plastic bottles can be placed on the 3 tiers as well as an additional row in front of the first tier. Each tier of the 24" stand holds 7 bottles, and 11 bottles on the 36" stands.

Simple Syrup Mixing Containers

10-Gallon Heavy Duty Rubbermaid® Container	$62.70
20-Gallon Heavy Duty Rubbermaid® Container	79.38
32-Gallon Heavy Duty Rubbermaid® Container	100.67

Heavy-duty Rubbermaid® brand polyethylene containers in foodservice white polyethylene are used to mix batches of simple syrup. Each unit has graduated markings for measuring water and sugar. Come complete with lid and a double-action Tomlinson brand spigot.

*****All prices are subject to change. *****

To Order Call 1-800-366-9766

© Copyright 2007. SnoWizard®, Inc. 101 River Road New Orleans, LA 70121● 800-366-9766 ● www.snowizard.com

SINCE 1936 SnoWizard® INC.

Nobody beats the Wiz®

The Best Tasting Flavors in the Industry!

0 14147 101636

- ALMOND
- AMARETTO
- ANISETTE
- APRICOT
- BAHAM MAMA
- BANANA
- BLACKBERRY
- BLACK CHERRY
- BLACK WALNUT
- BLUEBERRY
- BLUE COCONUT
- BLUE COTTON CANDY
- BLUE EAGLE
- BLUE HAWAIIAN
- BLUE RASPBERRY
- BRANDY
- BUBBLE GUM BLUE
- BUTTERCREAM
- BUTTERED POPCORN
- BUTTERSCOTCH
- BUTTER PECAN
- BUTTER TOFFEE
- CAJUN RED HOT®
- CAKE BATTER
- CANDY APPLE
- CANTALOUPE
- CARAMEL
- CHAI LATTEA
- CHAMOY ***New***
- CHERIMOYA
- CHERRY
- CHILLER®
- CHOCOLATE
- CINNAMON
- CLEARLY BLACKBERRY
- CLEARLY BUBBLE GUM
- CLEARLY CHERRY
- CLEARLY GRAPE
- CLEARLY PINEAPPLE
- CLEARLY RASPBERRY
- CLEARLY SPEARMINT
- CLEARLY STRAWBERRY
- COCONUT
- COFFEE
- COLA
- COOKIE DOUGH
- COTTON CANDY
- CREAM SODA
- CREAMY COCONUT
- CREME DE COCOA
- CREME DE MENTHE
- CREOLE CREAM CHEESE
- CUSTARD
- DAIQUIRI
- DILL PICKLE
- DOBERGE CAKE ***New***
- DREAMSICLE
- DULCE DE LECHE
- DUTCH APPLE PIE ***New***
- EGG CUSTARD
- FRENCH VANILLA
- FUZZY NAVEL
- GEORGIA PEACH
- GOLDEN APPLE
- GRANNY SMITH APPLE
- GRAPE
- GRAPEFRUIT
- GUAVA
- HAWAIIAN
- HAZELNUT
- HONEY ALMOND
- HONEYDEW MELON
- HORCHATA
- HURRICANE
- ICE CREAM
- ICED TEA
- IRISH CREAM
- JALAPENO STINGER® ***New***
- KEY LIME PIE ***New***
- KING CAKE
- KIWI
- LECHE
- LEMON
- LEMONADE
- LEMON-LIME
- LICORICE
- LIME
- MAI TAI
- MANDARIN
- MANGO
- MARASCHINO
- MARGARITA
- MOCHA
- MOJITO
- MOUNTAIN MAPLE®
- MUDSLIDE
- NECTAR
- ORANGE
- ORCHID VANILLA MAGIC®
- PAPAYA
- PASSION FRUIT
- PEANUT BUTTER
- PEAR
- PECTORAL PUNCH
- PEPPERMINT
- PINA COLADA
- PINEAPPLE
- PINK BUBBLE GUM
- PINK CHAMPAGNE
- PINK LEMONADE
- PINK LEMON SOUR
- PISTACHIO
- PLUM
- POLAR PUNCH
- POPEYE
- POMEGRANATE
- PRALINE
- PUCKER®
- RASPBERRY
- RED VELVET CAKE
- ROOT BEER
- RUM
- SANGRIA
- S'MORES ***New***
- SILVER FOX
- SPEARMINT
- SPUMONI
- STRAWBERRY
- STRAWBERRY CHEESECAKE
- STRAWBERRY SHORTCAKE
- SWISS ALMOND COCO™
- TAMARIND
- TANGERINE
- TIDAL WAVE®
- TIGER'S BLOOD
- TIRA MISU
- TOASTED COCONUT
- TOASTED MARSHMALLOW ***New***
- TROPICS
- TUTTI FRUTTI
- VANILLA
- VANILLA BUTTER & NUT
- VANILLA MALT
- WATERMELON
- WEDDING CAKE
- WHITE CHOCOLATE & CHIPS®
- WHITE RUSSIAN
- WHITE VANILLA
- WILD BLUEBERRY
- WILD CHERRY
- WILD STRAWBERRY
- WINE COOLER
- ZEPHYR® ***New***
- *SnoLite® Sugar-Free Mix*
- *SnoSour® Sour Acid Mix*

TO ORDER CALL

TOLL FREE

1 800 366-9766

SAVE MONEY WITH EVERY PURCHASE OF SNOWIZARD FLAVORS!

SnoWizard® flavoring concentrates include valuable SnoPoints™ that can be redeemed for free flavors. Quart sizes have 15 SnoPoints™ and Gallon sizes have 40 SnoPoints™!

Purchases of as little as 10 gallons earns enough SnoPoints™ for 1 free quart of concentrate, and 25 gallons gets 1 free gallon.

40 SnoPoints

SnoWizard®, Inc. ● 101 River Road ● New Orleans, LA 70121 ● 504-832-3901 www.snowizard.com

SNOWIZARD® PRICE LIST

	Quarts	Gallons
Flavor Concentrates	**$11.50**	**$34.00**
Sodium Benzoate	**2.50**	**8.00**
Citric Acid	**6.88**	**19.20**
SnoSour® Sour Acid Mix	**8.00**	**24.75**
SnoLite® Sugar Free Mix (10 Pack)		**46.24**
SnoSweet® Sugar Free Mix (6 Pack)		**29.95**

STYROFOAM CUPS

8oz (1,000) 44.36
12oz (1,000) 55.27
16oz (500) 48.20
20oz (500) 53.46

Adjustable Cup Dispenser (6–10oz) 65.52
Adjustable Cup Dispenser (12–24oz) 88.37
Adjustable Cup Dispenser (32–46oz) 75.30
Stainless Steel Speed Rack 6-Bottle 96.06
Stainless Steel Speed Rack 9-Bottle 104.10
Sugar Dunnage Rack 172.13
3-Tier Bottle Stand 21/33-Bottle 163.50/208.50
Strawberry Topping (115oz) 23.00
Pineapple Topping (53oz) 9.72
Cherries with or w/out stems (½GL) 16.47/12.20
Crushed Cherries (½GL) 13.59
Hershey's Chocolate Syrup (96oz) 15.77
Chocolate Cone Dip (96oz) 20.03
Chocolate Hot Fudge (96oz) 18.80
Butterscotch Topping (96oz) 22.53
Caramel Topping (53oz) 10.68
Carnation Malted Milk (2.5lb) 16.15
Frostline Vanilla Softserve (6/6lb bag) 113.18
Granulated Peanuts (½ GL) 7.81
Liquid Malt (GL) 17.43
Marshmallow Cream (36oz) 9.69
Condensed Milk (5 GL Pail) 113.52
Granulated Sugar (50lb) 41.03

SUPPLIES

Jumbo Straws (12,500) 66.05
Slim Straws (5,000) 26.14
Spoon Straws (5,000 Neon) 54.95
Block Ice Bags (500) 48.50
Flurry Take Out Trays (300) 85.31
Flurry Take Out Trays (150) 45.50

MIXING CONTAINERS & ACCESSORIES

10-GL Mixing Container with Graduations 62.70
20-GL Mixing Container with Graduations 79.38
32-GL Mixing Container with Graduations 100.67
Spigot-Dispenser/Mixing Container 12.58/31.23
40" Stirring Paddle 37.65
24" Wire Whisk Stirrer 32.40
Utility Brush 14.30
Hand & Nail Brush 23.38
Bottle Brush 12.58

Aluminum Brush Rack 25.25
Glass Serving Bottles 750mm (12) 33.99
Clear Plastic Quart Serving Bottles (12) 19.57
½ Gallon Jug (6) 23.76
Gallon Jugs (each) 2.72
Gallon Jug (6) 18.85
Gallon Jug (12) 36.26
Gallon Jug (24) 67.43
Plastic Quart Squeeze Bottles (06) 22.93
Plastic Quart Squeeze Bottles (12) 43.69
Plastic Opaque Quarts (12) 15.44
Gallon Jug Pump (each) 3.16

Plastic Pourers (12) 4.42
Bottle Cap/Gallon Cap ..... .10/.15
Pourer Cap/Push-Pull Cap ..... .15/.33
Cup Shaper Small 5.82
Cup Shaper Large 6.79
Single Ice Pick 5.25
6-Prong Ice Pick 16.92
Spatula 4.60
Counter Sponge 2.51

PH Chlorine Test Kit 8.62
Powdered Sanitizer (100 Packs) 57.17
Refrigerator/Freezer Thermometer 2.37
Propylene Glycol (5 GLS) 256.14

Plastic Spoons 5" (1,000) 14.48
Soda Spoons 8" (1,000) 26.43
Paper Umbrellas (144) 7.35
Napkins (10,000) 64.02
Napkin Dispenser 21.72

Prices Subject To Change Without Notice

Special Order Equipment: Condiment & Fruit Dispensers, Malt and Smoothie Mixers, Nacho Cheese & Chip, Hot Dog and Popcorn Machines, Syrup Pumps and Cone Dip Warmers.

SnoWizard®

BLOCKMASTER™

The Perfect Companion for Your SnoWizard SnoBall Machine®!

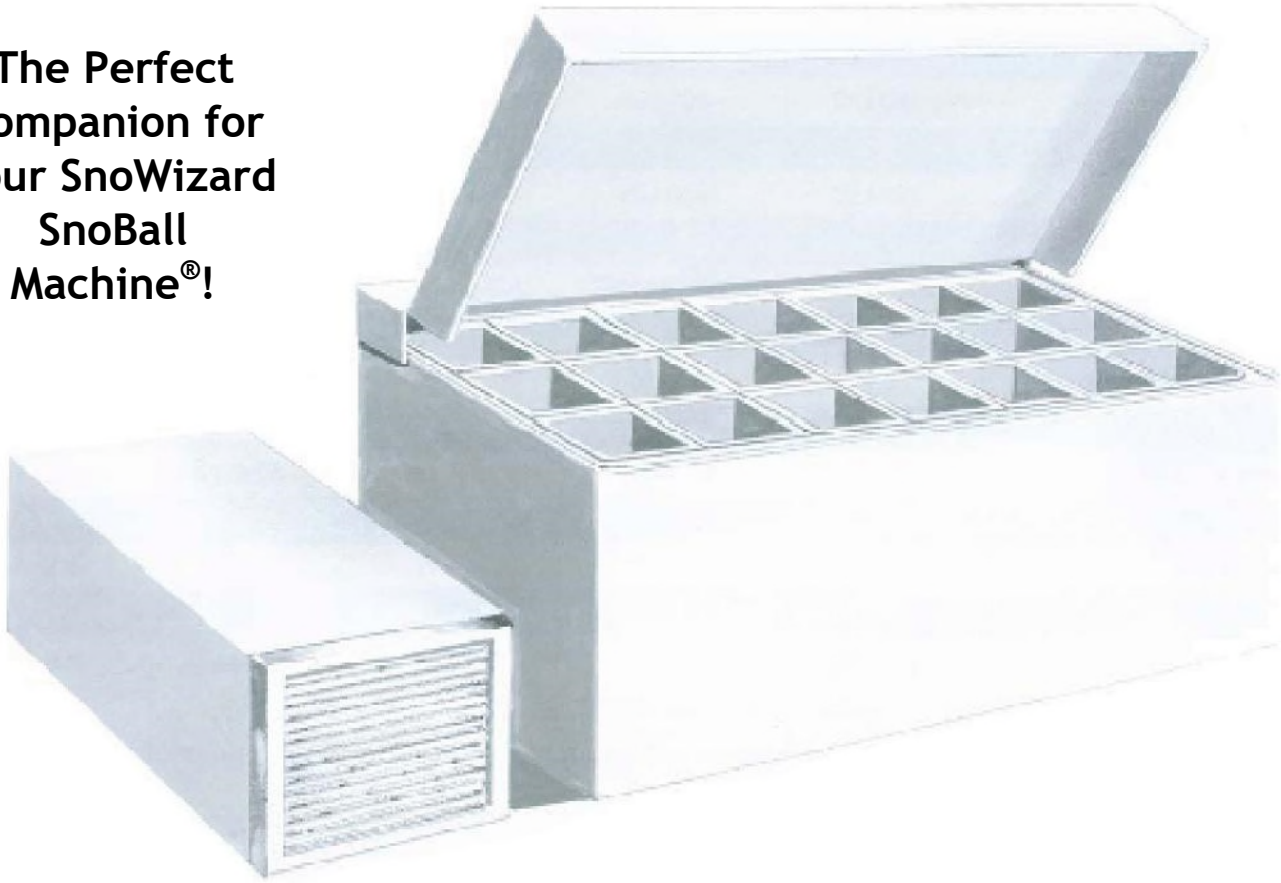

The BlockMasterTM icemaker has been designed to produce clean, pure, and sanitary blocks of ice, the perfect size to fit the SnoWizard SnoBall Machine®. The cabinet is constructed of durable gel coated fiber glass with polyurethane foamed-in-place insulation. The cabinet has a 20 year guarantee against leaking.

That's right! Now you can make your own block ice, the perfect size to use in your SnoBall machine. Each block measures 5" square by 15" in length, about 15 pounds per block. Perfect, pure, clean blocks of ice can be produced in approximately 14 hours in the convenience of your own business. No need to cut your own ice or be at the mercy of the ice house for deliveries. The BlockMasterTM machines produce ice so efficiently, that most businesses can pay for its cost in less than 6 months of use.

ADVANTAGES

- Convenience of having your own ice
- No labor required to cut ice into blocks
- No loss of ice due to melting, chipping and waste
- No more trips to the ice house or waiting for ice deliveries
- Large 14 to 15 pound blocks produce more SnoBalls with less frequent recharging of ice.
- Uniform flat blocks of ice shave easier and smoother for quality, consistent snow.
- Produce ice at approximately 10% to 15% of the cost of buying it.

0 14147 10160 5

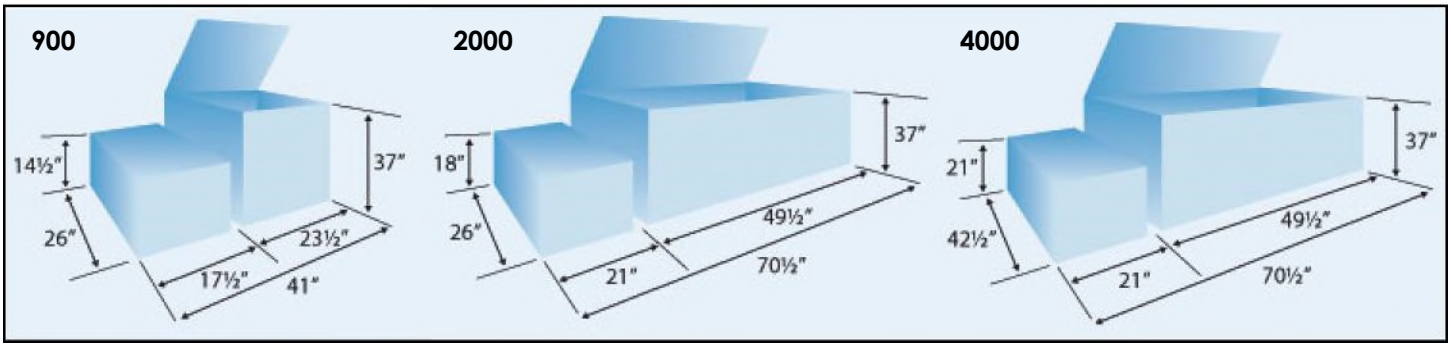

MODEL NUMBER	BM-900	BM-2000	BM-4200	BM-4400
Unit Weight	180 LBS	400 LBS	510 LBS	700 LBS
Propylene Glycol	15 GLS	30 GLS	40 GLS	40 GLS
Glycol Weight	135 LBS	270 LBS	360 LBS	360 LBS
No. Blocks Makes	9	20	40	40
Approx. Freeze Time	12 HRS	14 HRS	12HRS	8HRS
Electrical Current	115V/60HZ	230V/50HZ	230V/60HZ	230V/60HZ
Amps/Condensing Unit	5.2	10.5	14.8	14.8 x 2
Amps/Agitator Motor	5.1	5.1	5.1	5.1
Electrical Breaker	5.1	5.1	5.1	5.1
Horsepower	1/2	3/4	2 1/2	2 1/2 x 2
Refrigerant	404-A	404-A	404-A	404-A
Approx. Cost Per Block	$.12	$.12	$.12	$.12
Ice Made / Day	225 LBS	500 LBS	1200 LBS	1500 LBS

Other models available for commercial production. Warranty: 1 year on parts and 1 year on the compressor with a 90 day compressor labor allowance. Warranty work provided by the manufacturer.

Compare the cost of making your own BlockMasterTM to purchasing from an ice house!

-----Bought from an ice house-----

DAILY ICE USE	NO. BLOCKS	DAILY COST	MONTHLY COST	6 MONTH COST	BLOCKMASTERTM 6 MONTH COST	SAVINGS
150 LBS	12	$12	$360	$2160	$224	$1936
200 LBS	16	$16	$480	$2880	$298	$2582
250 LBS	20	$20	$600	$3600	$373	$3227
300 LBS	24	$24	$720	$4320	$448	$872

You can easily see how in as little as 6 months your BlockMasterTM machine can pay for itself.

Figures have been rounded to the nearest dollar amount. Ice cost is calculated at $8 per 100 pounds. Savings reflected are passed only on ice cost and do not include other savings from reduced labor required to cut ice, transportation to pick up ice or delivery charges.

Ice production for all units based on ambient air temperatures of 70 degrees (F) and water temperature of 50 degrees (F). Operating cost will vary depending on amount of ice made, temperature of water going into ice cans, ambient air temperatures and local electrical rates. Figures given are average approximate costs.

**Registered Trade Mark*
©Copyright, SnoWizard Holdings, Inc.
All rights reserved.

SINCE 1936 SnoWizard INC.

101 River Rd, New Orleans, LA 70121 • 504-832-3901 • TOLL FREE 800-366-9766 • www.SnoWizard.com

SINCE 1936 SnoWizard® INC.

0 14147 10151 3

Nobody beats the Wiz®

Budget Starter Package

1-800-366-9766

Our Budget Package is especially designed for those with a limited starting budget. The package contains 24 of our most popular flavors in quart sizes; gallon sizes of preservatives and our lip-puckering SnoSour® sour acid mix, and a box of our SnoLite® sugar-free simple syrup mix. All the necessary utensils for properly setting up a new business are included. This selection of flavors and supplies should keep a new business well stocked for approximately one month before re-order is necessary. With the addition of our compact 9-block icemaker, you can make your business totally self-contained and reduce your ice cost as much as 90%.

✔ ***SnoWizard SnoBall Machine®*** ✔ ***Polyethylene Drip Pan*** ✔ ***Extra Set of Blades***

Flavors - 24 Quarts

- **Almond**
- **Banana**
- **Blueberry**
- **Blackberry**
- **Bubble Gum**
- **Cherry**
- **Coconut**
- **Dreamsicle**
- **Georgia Peach**
- **Grape**
- **Hawaiian**
- **Ice Cream**
- **Lemon-Lime**
- **Margarita**
- **Orange**
- **Pina Colada**
- **Pineapple**
- **Raspberry**
- **Root Beer**
- **Spearmint**
- **Strawberry**
- **Tiger's Blood**
- **Vanilla**
- **Watermelon**

- **Sodium Benzoate**
- **Citric Acid**
- **SnoSour®**
- **SnoLite®**

Includes:

1	Case 8oz Styrofoam Cups (1000)	72	Mylar Bottle Labels	1	Rubber Spatula
1	Case 12oz Styrofoam Cups (1000)	1	Stirring Whisk	2	Cup Shaper Small
1	Case 16oz Styrofoam Cups (500)	48	Pourer Caps	2	Cup Shaper Large
2	Boxes Plastic Spoons (2000)	1	Bottle Drain Tray	1	Ice Pick
1	Case Jumbo Straws (12500)	1	Tiered Bottle Stand (21 Bottles)	1	Box Sanitizer
1	Case Paper Napkins (10000)	1	Bottle Brush	1	PH Test Kit
1	10 Gallon Mixing Container	1	Pourer Brush	1	Counter Sponge
48	Glass Serving Bottles	1	Gallon Jug Brush	1	Napkin Dispenser
48	Plastic Pourers	1	Utility Brush	1	SnoSour Spray Bottle
6	Gallon Jugs & Caps	1	Hand & Nail Brush		
24	Squeeze Measuring Bottles	1	Aluminum Brush Rack		

SnoWizard® offers the most complete packages in the industry, we know as we invented the concept! Our shaved ice packages include products that will be used in your business each and every day. Compare item to item to any other competitors packages, and SnoWizard® wins on all counts. Call us today for comparison or assistance in designing a package for you.

SINCE 1936 SnoWizard® INC.

0 14147 10154 4

Nobody beats the Wiz®

Recommended Package

1-800-366-9766

This is our most popular package and designed to keep the average new business in the snow for over a month. It contains a selection of 32 of our most popular flavoring concentrates with the best sellers in gallon sizes, our lip-puckering SnoSour® sour acid mix, and a box of our SnoLite® sugar-free simple syrup mix. Included is our 20-gallon syrup mixing container, paddle, an ample amount of cups in serving sizes from Small to Extra-Large, and all other necessary preparation and serving items. With the addition of our 20-block icemaker, you can make your business totally self-contained and reduce your ice cost as much as 90%.

✔ *SnoWizard SnoBall Machine®* ✔ *Polyethylene Drip Pan* ✔ *Extra Set of Blades*

Flavors - 12 Quarts and 20 Gallons

QUARTS	• Almond	• Cotton Candy	• Orange	• Spearmint
	• Blackberry	• Hawaiian	• Passion Fruit	• Tutti Frutti
	• Blueberry	• Lemon	• Root Beer	• Wine Cooler
GALLONS	• Banana	• Georgia Peach	• Lemon-Lime	• Straw. Cheesecake
	• Bubble Gum	• Granny Smith	• Margarita	• Tiger's Blood
	• Cherry	• Grape	• Pina Colada	• Vanilla
	• Coconut	• Ice Cream	• Pineapple	• Watermelon
	• Dreamsicle	• Kiwi	• Strawberry	• Wedding Cake
	• Sodium Benzoate	• Citric Acid	• SnoSour®	• SnoLite® *(Box of 10)*

Includes:

1	Case 8oz Styrofoam Cups (1000)	72	Pourer Caps	1	Aluminum Brush Rack
1	Case 12oz Styrofoam Cups (1000)	36	Squeeze Measuring Bottles	1	Rubber Spatula
1	Case 16oz Styrofoam Cups (500)	96	Mylar Bottle Labels	1	12 & 20oz Measure Cups
1	Case 20oz Styrofoam Cups (500)	12	Gallon Jugs & Caps	2	Cup Shaper Small
4	Boxes Plastic Spoons (2000)	1	Bottle Drain Tray	2	Cup Shaper Large
1	Case Jumbo Straws (12500)	1	3-Tiered 33 Bottle Stand	1	SnoSour Spray Bottle
1	Case Take Out Trays (300)	1	Stirring Paddle	1	Ice Pick
1	Case Paper Napkins (10000)	1	Bottle Brush	1	Box Sanitizer
1	Napkin Dispenser	1	Pourer Brush	1	PH Test Kit
1	20 Gallon Mixing Container	1	Gallon Jug Brush	1	Counter Sponge
72	Glass Serving Bottles	1	Utility Brush	1	Ref/Freezer Therm.
72	Plastic Pourers	1	Hand & Nail Brush		

SnoWizard® offers the most complete packages in the industry, we know as we invented the concept! Our shaved ice packages include products that will be used in your business each and every day. Compare item to item to any other competitors packages, and SnoWizard® wins on all counts. Call us today for comparison or assistance in designing a package for you.

SnoWizard®, Inc. • 101 River Road • New Orleans, LA 70121 • 800-366-9766 • www.snowizard.com

SINCE 1936 SnoWizard® INC.

Nobody beats the Wiz®

1-800-366-9766

Super Starter Package

This Super Starter Package was designed for the SnoBall entrepreneur and offers economy and convenience for the complete and totally self-sufficient business. You will never need to worry about your ice supply, or cost, as we have included our most popular icemaker in this package. Also included is a selection of 40 flavoring concentrates to satisfy most any customer's taste. This selection of equipment, supplies, flavorings, preparation items and utensils offers you the most complete package for your new SnoBall business.

✔ *SnoWizard SnoBall Machine®* ✔ *20 Block Icemaker* ✔ *Polyethylene Drip Pan* ✔ *Extra Set of Blades*

Flavors – 16 Quarts and 24 Gallons

QUARTS

- Almond
- Black Cherry
- Blackberry
- Buttercream
- Cajun Red Hot®
- Cola
- Daiquiri
- Hawaiian
- Mango
- Orange
- Passion Fruit
- Root Beer
- Spearmint
- Tangerine
- Tutti Frutti
- Wine Cooler

GALLONS

- Banana
- Blueberry
- Bubble Gum
- Cherry
- Coconut
- Cotton Candy
- Dreamsicle
- Georgia Peach
- Granny Smith
- Grape
- Ice Cream
- Kiwi
- Lemon
- Lemon-Lime
- Margarita
- Pina Colada
- Pineapple
- Raspberry
- Strawberry
- Str. Cheesecake
- Tiger's Blood
- Vanilla
- Watermelon
- Wedding Cake

- Sod. Benzoate (2)
- Citric Acid
- SnoSour®
- SnoLite® *(Box of 10)*

Includes:

1	Case 8oz Styrofoam Cups (1000)	96	Pourer Caps	1	Aluminum Brush Rack
1	Case 12oz Styrofoam Cups (1000)	48	Squeeze Measuring Bottles	1	Rubber Spatula
1	Case 16oz Styrofoam Cups (500)	120	Mylar Bottle Labels	2	Cup Shaper Small
1	Case 20oz Styrofoam Cups (500)	12	Gallon Jugs & Caps	2	Cup Shaper Large
6	Boxes Plastic Spoons (2000)	1	Bottle Drain Tray	1	SnoSour Spray Bottle
1	Case Jumbo Straws (12500)	1	3-Tiered 33 Bottle Stand	1	Ice Pick
1	Case Take Out Trays (300)	1	Stirring Paddle	1	Box Sanitizer
1	Case Paper Napkins (10000)	1	Bottle Brush	1	PH Test Kit
1	32 Gallon Mixing Container	1	Pourer Brush	2	Counter Sponge
96	Glass Serving Bottles	1	Utility Brush	1	Ref/Freezer Therm.
96	Plastic Pourers	1	Hand & Nail Brush	1	Napkin Dispenser
		1	Gallon Jug Brush		

SnoWizard® offers the most complete packages in the industry, we know as we invented the concept! Our shaved ice packages include products that will be used in your business each and every day. Compare item to item to any other competitors packages, and SnoWizard® wins on all counts. Call us today for comparison or assistance in designing a package for you.

SnoWizard®, Inc. • 101 River Road • New Orleans, LA 70121 • 800-366-9766 • www.snowizard.com

SIMPLE SYRUP MADE SIMPLE

Simple syrup is the base for the making of all snoball flavorings and is so named as it is *"simple"* to make. The basic simple syrup formulation is made with a 50/50 mixture of sugar and water. The mixture is 50% sugar measured by weight, dissolved in 50% of water measured by volume – 5 lbs or 80 dry ounces of sugar dissolved in 80 fluid ounces of water.

To make 1 gallon of simple syrup, dissolve 5 pounds of sugar into 2½ quarts, or 80 ounces of water. The water should be at room temperature. The use of warm or hot water is neither necessary or recommended as this will only result in having to wait for the syrup to cool before being ready for use.

The easiest method to make simple syrup is to mix the water and sugar in a SnoWizard® mixing container with a stirring paddle. Mixing containers come in 10, 20 and 32 gallon sizes, have graduated markings for measuring water and sugar, and come complete with lid and pouring spigot. The syrup can be made quickly and efficiently with no mess in as little as 30 minutes.

To make a batch of simple syrup, first add the proper amount of water to the mixing container, and then slowly pour in the sugar while stirring with the paddle. *The sugar will be very difficult to stir up from the bottom if added before the water*. Allow the mixture to rest for 10 minutes, then stir again with the paddle. Allow the mixture to rest another 10 minutes, and then stir again. The mixture should be ready for use after a final rest of 10 minutes.

PRESERVING SIMPLE SYRUP

Simple syrup will keep on average for a period of 7 to 10 days depending on the ambient room temperature. Flavorings made with the simple syrup will have the same shelf life. This period can be shortened to just a few days if the syrup is kept in a warm environment. Sodium Benzoate, a preservative, may be added to the simple syrup to extend the shelf life. Sodium Benzoate is the same preservative that is used in most soft drinks. However, like a 2-part epoxy glue, the Sodium Benzoate needs a catalyst to activate its preserving properties and therefore an acid must be used with it. Citric Acid is the recommended acid for use with the Sodium Benzoate. However, most other approved food acids such as phosphoric, tartaric and Malic acids will suffice.

Simple syrup can be preserved for months by adding 1 ounce of sodium benzoate with ¼ ounce of citric acid, per gallon of simple syrup. Each ingredient must be added separately and stirred into the syrup separately and thoroughly. Caution should be taken not to allow the sodium benzoate and citric acid to come into direct contact with each other as they will solidify. The sodium benzoate and citric acid will not affect the taste of the simple syrup or the flavors made with it.

To preserve simple syrup, the preservatives must be added to the simple syrup or RTU flavoring at the time it is made. Adding them to RTU flavorings or simple syrup that is more than several days old will not stop or prevent the growth of mold that has already began in microscopic form. Always add the preservatives to your simple syrup at the time the syrup is made.

© Copyright 2014. SnoWizard®, Inc. ● 101 River Road New Orleans, LA 70121 ● 1-800-366-9766 ● www.snowizard.com

Mixing Ready to Use (RTU) Syrup			Optional Preservatives	
To Make:	Water	Sugar	Citric Acid	S. Benzoate
1 Gallon	2 Quarts and 16 oz	5 lbs	¼ oz	1 oz
5 Gallons	3 Gallons and 16 oz	25 lbs	1¼ oz	5 oz
10 Gallons	6 Gallons and 32 oz	50 lbs	2½ oz	10 oz
15 Gallons	9 Gallons and 48 oz	75 lbs	3¾ oz	15 oz
20 Gallons	12 Gallons and 64 oz	100 lbs	5 oz	20 oz
25 Gallons	15 Gallons and 80 oz	125 lbs	6¼ oz	25 oz

MIXING OF FLAVORS

Before pouring any flavoring concentrates to make flavors, tighten the cap and shake the container vigorously to insure that the concentrates are mixed thoroughly. This should be done before each and every use. Failure to vigorously shake the flavoring concentrates may result in the finished flavor having an abnormal taste. Separation of certain oils and flavoring compounds may occur when flavoring concentrates are at rest on a shelf and have not been used for a while. Please instruct all employees.

To mix ready-to-use (RTU) flavors, vigorously shake the bottle of concentrate, then measure 4 ounces of the desired SnoWizard® flavoring and pour into a plastic gallon jug. Fill the container with simple syrup, cap, tighten and then shake well. To make 1 quart bottle add 1 ounce and fill with simple syrup.

CITRIC ACID

Citric acid, often and mistakenly referred to as a fruit acid by many, is present in all SnoWizard® flavoring concentrates that are derived from a citrus type fruit. Citrus type concentrates are formulated with the proper amount of citric acid to produce a true-to-the-fruit citrus tartness for their respective flavor.

If extra tartness is desired for a specific flavoring, then additional citric acid can be added to the RTU flavor. The recommended usage is ¼ to 1 ounce of citric acid to each gallon of RTU flavoring for a mild to medium increase in tartness. To produce a tartness level that results in an acute increase in tartness that will pucker one's tongue, add 3 to 5 ounces of additional citric acid per gallon of RTU flavoring.

SNOSOUR® SOUR ACID MIX

SnoSour® is a specially formulated sour acid mix developed by SnoWizard® to produce a really, super tartness in any desired flavoring. Much stronger and tarter than citric acid, less SnoSour® can be used to achieve a greater tartness effect. To make super sour flavors like Sour Grape, Sour Cherry or Sour Lemon, add 3 to 5 ounces of SnoSour® to any desired gallon of RTU syrup. SnoSour® can also be sprayed directly on the tops of SnoBalls to create Sour Tops or Warhead Tops.

© Copyright 2014. SnoWizard®, Inc. ● 101 River Road New Orleans, LA 70121 ● 1-800-366-9766 ● www.snowizard.com

0 14147 10156 8

SINCE 1936 SnoWizard® INC.

Nobody beats the Wiz®

SnoLite®

SnoWizard® brings you another "first" with the only truly sugar-like product developed specifically for the shaved-ice industry. Developed in 1995, **SnoLite®** is the number one selling sugar-free simple syrup mix in the country.

If you're not using **SnoLite®** you don't know what you're missing. **SnoLite®** is a convenient and economical way to satisfy the needs of your customers who may be diabetic, dieting or avoiding sugar for whatever reason. Packaged in pre-measured pouches, simply mix with water and you have a sugar-free base syrup that can be flavored with any of our 130 flavors just as you would your regular syrup.

A combination of aspartame and Sorbitol gives **SnoLite®** a balanced full-level sweetness, without the bitter aftertaste usually associated with sugar substitutes. **SnoLite®** also contains special ingredients that give your finished product a real "syrup-like" consistency. No more watery concoctions, no more tearing hundreds of little packs of sweetener and no more lost sales. With **SnoLite®** you can offer your customers a **real** alternative to sugar.

Not only is **SnoLite®** a great product, it is also a great bargain. A case of ten packets is only $33.00 - that's just $3.30 to make a gallon! This is a little more than the cost of 5 pounds of sugar, but as the example below indicates, this is easily offset by the prices that sugar-free SnoBalls can demand.

So don't delay. Call toll-free 1-800-366-9766 and order your **SnoLite®** today.

	Sugar @ 35¢ lb	SnoLite®
*Cost to make 1 GAL of syrup**	$2.45	$3.70
*Cost per 12oz SnoBall***	$0.06	$0.09
Price charged per SnoBall	$1.00	$1.50
Increased profit per SnoBall		***47¢***

**Including flavor extract **Based on 40- 12oz SnoBalls per gallon of mixed flavor*

In taste tests conducted comparing SnoLite® to simple syrup made with sucralose, saccharin, and aspartame alone, more people preferred the taste of SnoLite® simple syrup than simple syrups made with all other sweeteners.

NUTRITIONAL INFORMATION*

Calories	*1.61*
Calories from Fat	*0*
Total Fat	*0*
Saturated Fat	*0*
Cholesterol	*0*
Dietary Fiber	*0*
Protein	*0.11g*
Carbohydrates	*1.11g*

**Per 1 fluid ounce as prepared with water.*

© Copyright 2014. SnoWizard®, Inc. ● 101 River Road, New Orleans, LA 70121 ● 1-800-366-9766 ● www.SnoWizard.com

SINCE 1936 SnoWizard INC
101 River Road New Orleans, LA 70121
800-366-9766 • 504-832-3901

Nobody beats the Wiz®

014147101612

FLAVOR		COLOR	DESCRIPTION	
Almond	✓	Creamy White	Smooth, rich Almond flavor.	
Amaretto	✓	Light Brown	Tastes like Amaretto liquor. ♈	
Anisette		Red	Red Licorice flavor.	
Golden Apple		Golden	Sweet, delicious, fresh Apple flavor.	
Granny Smith Apple		Green	*VERY TART* Apple taste. Some also call this Sour Apple or Green Apple.	
Apricot		Reddish Orange	Fresh, RIPE Apricot taste.	
Bahama Mama		Orangey Red Sunrise	Tropical Fruity flavors with rum background.	
Banana	✓	Yellow	Robust, full Banana flavor.	
Black Cherry		Dark Red	Delicious, fruity, *REAL* Black Cherry taste. Very dark in color.	
Black Walnut		Caramel	Smooth, real Black Walnut taste.	
Blackberry		Blackish Red	Blackberry taste so true you'll wonder if there are seeds in the bottle!	
Blue Coconut		Blue	Our great Coconut flavor colored blue.	★
Blue Cotton Candy		Baby blue	Our great Cotton Candy flavor in a baby blue color.	
Blue Eagle		Blue	Mellow, sweet Bubble Gum flavor.	★
Blue Hawaiian		Blue	Rum base with berries. Tastes like the cocktail "Blue Hawaii".	
Blue Raspberry		Blue	Like our regular Raspberry, but with a bit more "razz" and a bold blue color.	
Blueberry	✓	Blue	Outstanding, true-to-life Blueberry flavor.	
Brandy		Brown	You may be tempted to serve this one in a snifter.	★
Bubble Gum		Blue	Original New Orleans Bubble Gum flavor. Strong Bubble Gum taste.	★
Butter Pecan		Brown	Rich buttery Pecan flavor. ♈	
Butter Toffee		Brown	Rich buttery, Nutty Toffee flavor. ♈	★
Buttercream	✓	Brown	Rich creamy, buttery, Vanilla taste. ♈	★
Buttered Popcorn		Golden Yellow	Unbelievable fresh Popcorn taste drizzled with butter – just like at the movie theater.	
Butterscotch		Brown	Rich Butterscotch flavor. ♈	★
Cajun Red Hot®		Red	Hot, Cinnamon flavor. Tastes like "Red Hot Candies".	
Cake Batter	✓	Golden Yellow	True Yellow Cake Batter flavor -for those cake lovers that can't get enough of that sweet taste!	
Candy Apple		Red	Sweet Apple flavor with a hint of candied Cinnamon and Caramel.	
Cantaloupe		Orange	Tastes like a slice of fresh Cantaloupe. Great Melon taste.	
Caramel		Brown	Reminiscent of those great little Caramel candy squares. Rich flavor.	
Chai Lattea		Opaque Yellow	Delicious blend of rare teas, milk, exotic spices, and pure vanilla extract. ♈	
Chamoy		Burnt Orange	Ancho chilies, apricot, lime and our special blend of fruit flavors recreates the taste of this popular Mexican fruit dip.	
Cherimoya	✓	Yellow	Rich, creamy custardy taste with notes of strawberry, pineapple and banana. ♈	★
Cherry		Dark Red	Fruity, full Cherry taste. Medium dark in color.	★
Chiller®		Neon Blue	Refreshing, cool, slightly citrus, Arctic taste.	★
Chocolate	✓	Dark Brown	*Real* Milk Chocolate flavor. ♈	
Cinnamon		Yellow	True Cinnamon flavor with a bite!	
Clearly Blackberry		Clear	Blackberry flavor with no added color.	
Clearly Bubble Gum		Clear	Bubble Gum flavor with no added color.	★
Clearly Cherry		Clear	Cherry with no added color.	★
Clearly Grape		Clear	Grape with no added color.	★
Clearly Pineapple		Clear	Pineapple flavor with no added color.	★
Clearly Raspberry		Clear	Raspberry flavor with no added color.	
Clearly Spearmint		Clear	Spearmint with no added color.	★
Clearly Strawberry		Clear	Strawberry flavor with no added color.	
Coconut	✓	Clear	Rich, well rounded, smooth Coconut flavor.	★
Coffee	✓	Brown	Rich full flavor. Made with real Columbian coffee. Juan Valdezs' favorite! ♈	
Cola		Brown	Tastes like a Cola soft drink. ♈	★
Cookie Dough	✓	Brown	The delicious taste of cookie dough just like Mom used to make, but without the mixing bowl. ♈	
Cotton Candy		Red	Vanilla base with a sweet, "sugar spun" Cotton Candy flavor.	
Cream Soda		Red	Creamy Vanilla flavor with sweet finish.	
Creamy Coconut	✓	Creamy White	Fresh, grated Coconut taste with a creamy texture.	
Crème De Cocoa	✓	Brown	Very rich and full cocoa flavor. ♈	
Crème De Menthe		Green	Fresh, creamy mint taste.	★

Creole Cream Cheese	✓	Creamy White	Real New Orleans style Cream Cheese flavor. Mix with other flavors to make flavored cheesecakes.	
Custard	✓	Pale Brown	Real Custard taste. Use with other flavors to make flavored custards. ♈	
Daiquiri		Pale Greenish Yellow	Great blend of citrus and rum flavors. Formulated to be mixed with other flavors to make flavored Daiquiris.	
Dill Pickle		Bright Green	Zowie! Real Dill Pickle juice flavor that will make your lips pucker.	
Doberge Cake	✓	Chocolate Brown	Rich chocolate cake taste with buttercream and ganach icings.	
Dreamsicle	✓	Orange	Tastes like an Orange push-up ice cream bar. Creamy and smooth taste.	
Dulce de Leche	✓	Creamy Tan	Rich, creamy Caramel milk flavor. ♈	
Dutch Apple Pie		Golden Brown	Freshly baked apples with a cinnamon streusel topping along with a delicious graham cracker finish.	
Egg Custard	✓	Orange Yellow	Thick, luscious, real Egg-Custard flavor. ♈	
French Vanilla		Brown	Full Vanilla flavor with a hint of spice. ♈	
Fuzzy Navel		Yellow Orange	Blend of Peach, Orange, Vodka and other fruit flavors, but not real Vodka.	
Georgia Peach	✓	Reddish Orange	Peach flavor so true that you can taste the “fuzz”. Really!!!	
Grape		Dark Purple	REAL, true Grape taste with a true Grape tartness.	★
Grapefruit		Opaque	Real fresh Grapefruit taste made from pure white Grapefruit Oil. Delicious!	★
Guava		Red	Just like the Guava fruit.	
Hawaiian	✓	Red	A blend of tropical fruit juicy flavors similar to that of the Hawaiian Punch® drink.	★
Hazelnut		Dark Brown	Tastes like fresh Hazelnuts.	★
Honey Almond		Honey Color	A deliciously REAL Honey flavor combined with Almond.	
Honeydew Melon		Light Green	Fresh, ripe Honeydew taste	
Horchata	✓	Opaque White	Refreshing, cinnamon, vanilla rice milk with a hint of nuts. ♈	
Hurricane		Dark Red	Rum base with berries. Like the original Pat O’Brien’s Hurricane cocktail.	★
Ice Cream	✓	Yellow	Creamy, rich Vanilla ice cream flavor.	
Iced Tea		Golden Brown	Made from all natural, select Chinese Black Tea leaves for a real tea flavor.	
Irish Cream	✓	Ecru	Luscious Irish Liquor flavor. Very smooth.	★
Jalapeno Stinger®		Green	A blend of citrus, spice and other natural flavors with a Jalapeno kick that will blow your Sombrero off!	
Key Lime Pie	✓	Opaque Greenish-Yellow	A delicious taste of fresh whipped cream, followed by the tartness of tart Key Limes with a wonderful shortcake crust finish.	
King Cake	✓	Royal Purple	A unique blend of cake flavoring, rum, butter, and pure vanilla extract to taste like the traditional Mardi Gras cake.♈	
Kiwi		Bright Green	Tastes like fresh-picked Kiwi fruit.	
Leche	✓	Creamy White	Creamy Vanilla Almond with a hint of Cinnamon.	
Lemon		Light Yellow	Fresh, sweet Lemon flavor.	
Lemonade		Clear	Fresh-squeezed, true Lemonade taste	
Lemon-Lime		Bright Green	Refreshing combination of Lemon and Lime flavors, strong tartness.	
Licorice		Red	Old-time Licorice candy taste.	★
Lime		Dark Green	Robust Lime flavor, just like fresh squeezed limes.	★
Mai Tai		Reddish Orange	Like the cocktail: rum with citrus fruit flavors.	
Mango		Yellow-Green	True, fresh-fruit Mango taste.	
Mandarin		Orange	Fresh-picked Mandarin orange flavor made with pure Italian Mandarin oil.	★
Mountain Maple®	✓	Brown	Just like Maple syrup right from the barrel.	
Maraschino		Bright Red	Sweet, Maraschino Cherry taste. If you like those little cocktail cherries, you’ll love this one!	
Margarita		Bright Green	Tastes like a REAL Margarita cocktail. Can be mixed with various other flavors to make flavored margaritas.	
Mocha	✓	Dark Brown	Savory coffee flavor with an infusion of milk chocolate. ♈	
Mojito		Opalescent Green	Just like the Caribbean cocktail. Rum, Lime and mint flavors blended with a hint of citrus.	★
Mudslide	✓	Dark Brown	Like the popular drink! A delicious blend of rum, coffee, cocoa and milk. ♈	
Nectar	✓	Reddish-Pink	Creamy vanilla-almond flavor with faint Peach overtones. The original old-time New Orleans Nectar Soda flavor made popular at the drug store soda bar.	★
Orange		Orange	Real, fresh-squeezed, Valencia Orange flavor.	★
Orchid Vanilla Magic®	✓	Neon Lavender	Rich creamy flowery vanilla flavor. Unique fluorescent color.	
Papaya		Reddish Orange	Tastes like the Papaya fruit.	
Passion Fruit		Pinkish Red	Captures the true essence of the Passion Fruit flower.	
Peanut Butter	✓	Brown	Choosy mothers would choose this one.	
Pear		Opaque Yellow	Fresh, ripe, pulpy Pear taste.	
Pectoral Punch®		Bright Green	Real citrus, fruit punch flavor made from a blend of 8 natural citrus fruits and natural fruit juice concentrates.	
Peppermint		Clear	Clean, refreshing Peppermint flavor.	★
Pina Colada	✓	White	Just like a real Pina Colada from a bartender’s blender. Made with cane Rum flavor for a true taste. Mix with other flavors to make flavored Coladas.	
Pineapple		Yellow	Like freshly sliced Pineapples.	★

Pink Bubble Gum		Bright Pink	Tastes like Bazooka® brand Bubble Gum.	
Pink Champagne		Bright Pink	Sweet Champagne taste without the bubbles.	
Pink Lemonade		Light Pink	Same great taste as our great tasting Lemonade, but with a light pink color.	
Pink Lemon Sour		Pink	Taste of pure lemon combined with a tart, sour kick that makes for a delicious citrus cooler.	
Pistachio		Green	Just like freshly shucked Pistachio nuts.	
Plum		Dark Purple	Robust Plum flavor.	
Polar Punch		Neon Blue	Very cool and refreshing, icy Punch taste. Bright, fluorescent blue color.	
Pomegranate		Red	Real, fresh squeezed Pomegranate taste.	
Popeye		Dark Green	Bubble Gum with a "spinach-green" color.	★
Praline	✓	Golden Brown	Like New Orleans Praline candies. Nutty, sweet Caramel made with Pure Vanilla extract. ♈	★
Pucker®		Pumpkin Orange	A blend of natural fruit flavors with a real kick that will make your lips "Pucker".	
Raspberry		Bright Red	Intense, fruity and tart Raspberry flavor.	
Red Velvet Cake	✓	Rich, Velvety Red	Like the real thing! Rich cake flavor with vanilla, cocoa, coconut and other flavors.	
Root Beer		Brown	A real, strong homemade Root Beer taste. ♈	
Rum		Brown	Take one down, pass it around, 99 bottles..... Strong Rum taste.	★
Sangria		Red	Mixed citrus fruits with sweet red wine flavor.	
Silver Fox	✓	White	Creamy Almond and Vanilla combination.	
S'Mores		Brown	The taste of real toasted marshmallow and chocolate, wrapped up with a graham cracker crust to bring you this traditional American classic.	
Spearmint	✓	Dark Green	Rich, smooth and cool Spearmint flavor.	★
Spumoni		Bright Green	REAL Italian Spumoni taste.	
Strawberry	✓	Red	Like biting into a delicious, ripe Strawberry. Our most popular flavor!	
Strawberry Cheesecake	✓	Red	Unbelievable REAL Cheesecake flavor bursting with fresh Strawberries.	
Strawberry Shortcake		Red	Creamy Strawberry taste with a shortcake background.	
Swiss Almond Coco	✓	Creamy White	Special blend of Almond Coconut Chocolate and Cream - outstanding!	
Tamarind		Burnt Orange	From the popular Mexican fruit. Taste like a strong fruity tea.	
Tangerine		Orange	Teeming with a fresh, tart Tangerine flavor.	★
Tidal Wave®	✓	Seafoam Green	A unique, cool, refreshing, light Citrus "beachy" flavor. A great summer cooler.	
Tiger's Blood		Red	Fresh fruit berries with a hint of coconut. Delicious!	
Tira Misu	✓	Creamy Tan	Tastes like the delicious Italian dessert with hints of coffee and cocoa flavor.	
Toasted Coconut		Whitish Tan	Imagine those lightly browned Coconut shavings off of a fresh baked coconut cream pie.	
Toasted Marshmallow		Whitish Tan	Now you can enjoy the same great taste of fresh marshmallows that have been toasted over an open campfire. Revisit your childhood days with our new Toasted Marshmallow flavor. The only thing missing are the fireflies.	
Tropics		Burnt Orange	A blend of Strawberry, Banana, Pineapple and other flavors. Great Tropical taste.	
Tutti Frutti		Red	A scrumptious potpourri of fruits and berries. Full fruity taste. ♈	
Vanilla	✓	Light Brown	REAL, rich, full Vanilla flavor. ♈	
Vanilla Butter & Nut		Light Brown	REAL Vanilla Flavor with a delicious Butter and Nut taste.	
Vanilla Malt		Light Brown	REAL Vanilla flavor infused with robust malt flavor. ♈	
Watermelon		Red	Just like biting into a ripe Watermelon, but with no seeds to fight.	
Wedding Cake	✓	Creamy White	Has that unique taste that only a slice of Real Wedding Cake has.	
White Chocolate & Chips®	✓	White with Specks	A luscious Swiss Chocolate flavor with little specks. ♈	★
White Russian	✓	Brownish Tan	Taste just like the cocktail. Rich creamy cocoa flavor.	
White Vanilla		Clear	Just like our regular Vanilla, but with no color.	
Wild Blueberry		Blue	Taste like fresh picked Wild Blueberries. Riper Blueberry taste.	
Wild Cherry		Red	Great Wild Cherry taste – like Luden's Brand cough drop flavor.	
Wild Strawberry	✓	Red	Taste like tart, fresh picked Wild Strawberries. Riper Strawberry taste.	
Wine Cooler	✓	Yellow-Gold	Delicious, fruity, sweet White Wine taste. Mix with other flavors to make flavored Wine Coolers	
Zephyr®		Neon Blue	An intense medley of tropical fruits that will take you back to the beach, sipping on a refreshing cocktail at the Bali Hai!	

♈ Made with Pure Vanilla Extract. ✓ Excellent as a cream flavor. ★ Contains Sugar.

© Copyright 1987-2014. SnoWizard®, Inc.

SINCE 1936 SnoWizard® INC.

0 1 4 1 4 7 1 0 1 5 3 7

CREAMY DELIGHTS

CREAM FLAVORS are made by adding Evaporated Milk or Vanilla Ice Milk mix to regular or RTU (ready-to-use) flavors. Milk will complement certain flavors while not being suited for others. Citrus flavors with high acid content are not recommended with milk as the acid may cause the milk to curdle.

We recommend choosing quality brand-name milk such as Pet® or Carnation® brand to make cream flavors. Generic or store brands may be of lesser quality and have a tendency to curdle easily, especially in flavors with a high citric acid content.

Vanilla Ice Milk Mix is the product that is used in soft-serve ice cream machines to make ice cream. The product can be purchased from a local dairy in half-gallon or gallon containers and it must be kept refrigerated. Vanilla Ice Milk Mix makes for a better tasting cream flavor than does evaporated milk as it produces a creamier tasting flavor without the strong overtones of evaporated milk. The cost is also considerably less, at about one-third the price of evaporated milk.

Favorite flavors made into Cream flavors are:

ALMOND	CHOCOLATE	HORCHATA	PINA COLADA
AMARETTO	COFFEE	ICE CREAM	PRALINE
BANANA	COLADA	KING CAKE	SPEARMINT
BLUEBERRY	COOKIE DOUGH	MUDSLIDE	STRAWBERRY
BUTTERCREAM	DREAMSICLE	NECTAR	
CAKE BATTER	DULCE DE LECHE	ORCHID VANILLA MAGIC®	
CHERIMOYA	HAWAIIAN	GEORGIA PEACH	

To make Cream Flavors, add 5 to 6 ounces of evaporated milk to a 1/5th or 1-quart size serving bottle, fill with mixed flavor and shake well. Cream flavors must be kept refrigerated.

To make 1 Gallon of a Cream Flavor, add 4 ounces of the desired SnoWizard® flavoring concentrate (this recipe is also for the SnoWizard® Chocolate concentrate) to a 1-gallon jug, then 24 ounces of Vanilla Ice Milk Mix or evaporated milk, and fill with simple syrup. Shake well and refrigerate. Certain cream flavors may separate if the bottle or jug is left to rest for a while. To re-mix, shake the container vigorously before pouring. Businesses that do not have refrigeration and cannot keep pre-mixed cream flavors on hand can still serve cream flavors by keeping a serving bottle filled with milk, and pouring the milk over the finished snoball. The bottle can be kept cool by placing it in on ice or storing it in an ice chest during the day.

THE GRAND WIZARD'S CHOCOLATE CREAM SYRUP (1Gallon)

(Ronnie Sciortino, President and Flavorist of SnoWizard®, Inc.)

- *4 cups of Chocolate Syrup (Ronnie prefers Nestle's)*
- *1 ounce of SnoWizard® Buttercream Vanilla Concentrate*
  (You can also substitute our regular Vanilla concentrate or use Pure Vanilla Extract.)
- *24 ounces of Vanilla Ice Milk Mix*
- *Fill the rest of the gallon with Simple Syrup.*

Copyright 2014 © SnoWizard®, Inc. • 101 River Road • New Orleans, LA 70121 • 1-800-366-9766 • www.snowizard.com

SINCE 1936 SnoWizard® INC.

Nobody beats the Wiz®

SPECIAL COMBINATIONS

The following recipes are for 1 gallon quantities. To make 1 gallon of these flavors, add the ingredients listed for each flavor to a gallon jug and fill with simple syrup. Shake well.

(**Denotes recipe that is also great as a cream flavor.*)

DAIQUIRIS:

Make any of your favorite Daiquiris such as Banana, Peach, Raspberry, Strawberry, etc.

3-3½ oz SnoWizard® Daiquiri Concentrate
½-1 oz SnoWizard® Desired Flavor Concentrate

CHEESECAKES *:

Make any variety of Cheesecake such as Amaretto, Blueberry, Cherry, etc.

3-3½ oz SnoWizard® Creole Cream Cheese Concentrate
½-1 oz SnoWizard® Desired Flavor Concentrate

WINE COOLERS:

Make refreshing Wine Coolers in fruity flavors such as Blueberry, Blackberry, Cherry, etc.

3-3½ oz SnoWizard® Wine Cooler Concentrate
½-1 oz SnoWizard® Desired Flavor Concentrate

COLADAS*:

Create your own Colada Flavor by adding Strawberry, Cherry, Banana, Peach, etc.

3 oz SnoWizard® Pina Colada Concentrate
1 oz SnoWizard® Desired Flavor Concentrate

MARGARITAS:

Make different flavored Margaritas by adding Strawberry, Peach, Cherry, etc.

3 oz SnoWizard® Margarita Concentrate
1 oz SnoWizard® Desired Flavor Concentrate

CUSTARDS*:

Make any type of Custard flavor such as Coconut, Lemon, Rum, Vanilla, etc.

3 oz SnoWizard® Custard Concentrate
1 oz SnoWizard® Desired Flavor Concentrate

SOURS:

Make any of your favorite "sours" such as Sour Grape, Sour Cherry, etc.

3-5 oz SnoWizard® SnoSour® Sour Acid Mix
4 oz SnoWizard® Desired Flavor Concentrate

© Copyright 2014 • SnoWizard®, Inc. • 101 River Road New Orleans, LA 70121 •1 800-366-9766

SPECIALTY RECIPES

FUZZY NAVEL *

2 oz	SnoWizard® Orange Concentrate
2 oz	SnoWizard® Georgia Peach Conc.

PINK LEMONADE

4 oz	SnoWizard® Lemonade Concen.
1 oz	Citric Acid
6 drops	SnoWizard® Cherry Concen.

APPLE PIE

4 oz	SnoWizard® Golden Apple Conc.
¼ oz	SnoWizard® Cinnamon Concen.

NINJA TURTLE

2 oz	SnoWizard® Lime Concentrate
2 oz	SnoWizard® Banana Concentrate

CHOCOLATE CREAM

4 cups	Chocolate Flavored Syrup
1 oz	SnoWizard® Buttercream Vanilla
24 oz	Evap. or Vanilla Ice Milk Mix

JUNGLE JUICE

½ oz	SnoWizard® Almond Concentrate
2 oz	SnoWizard® Hawaiian Concen.
1 oz	SnoWizard® Pineapple Concen.
1 oz	SnoWizard® Lemon Concentrate

MAI TAI

1 oz	SnoWizard® Pineapple Concen.
1 oz	SnoWizard® Orange Concentrate
2 oz	SnoWizard® Passion Fruit Conc.

KAHLUA

5 oz	SnoWizard® Coffee Concentrate
1 oz	SnoWizard® Brandy Concentrate
1 oz	SnoWizard® Vanilla Concentrate
24 oz	Evap. or Vanilla Ice Milk Mix

LEMON MERINGUE PIE

3 oz	SnoWizard® Ice Cream Concen.
1 oz	SnoWizard® Lemonade Concen.
24 oz	Evap. or Vanilla Ice Milk Mix

SNICKERS

2 oz	SnoWizard® Chocolate Concen.
2 oz	SnoWizard® Praline Concentrate
24 oz	Evap. or Vanilla Ice Milk Mix

** Top SnoBall With Caramel Topping and crushed Nuts*

CAPPUCCINO

10 oz	SnoWizard® Coffee Concentrate
20 oz	Evap. or Vanilla Ice Milk Mix

SnoWizard® flavors can also be combined to make flavors such as:

- Banana-Bubble Gum
- Chocolate-Mint
- Cherry-Cola
- Kiwi-Lime
- Cherry-Vanilla
- Orange-Pineapple
- Strawberry-Banana
- Strawberry-Kiwi

© Copyright 2014 • SnoWizard®, Inc. • 101 River Road New Orleans, LA 70121 •1 800-366-9766

SINCE 1936 SnoWizard® INC.

Nobody beats the Wiz®

Frostline Soft Serve

As a Snoball Shoppe owner, you are looking at ways to offer new flavor experiences to your customers. Cream flavored snoballs are becoming all the rage in the snoball business. There are three main products available to make cream flavor snoballs: Frostline® Soft Serve mix, Vanilla Ice Milk, and Evaporated Milk. SnoWizard® *is proud to now offer Frostline® Soft serve Mix.*

Frostline® is a nondairy dry soft serve mix that delivers a fresh taste and creamy texture as compared to dairy soft serve products. Frostline® is low in fat, Cholesterol Free, and Lactose Free product, which expands your consumer appeal and is a benefit to those health conscious customers. Frostline® soft serve mix requires no refrigeration and can be stored at room temperature, in its powder form for up to 12 months. This will help minimize waste, as well as, no more worrying about checking expiration dates, or having refrigerator space to store the products.

Frostline® comes in six- six pound bags per case, which will make a total of 15 gallons of soft serve mix. Mixing Frostline® soft serve mix is very easy. Add 2 gallons of water with one bag of Frostline®, then mix until the powder is dissolved. Each bag yields 2.5 gallons of product. Once mixed, it can be stored in the refrigerator for up to seven days.

Vanilla Ice Milk has to be ordered directly from a dairy. If there is a local dairy in your area, there is usually a minimum delivery amount. Here at our Snoball Shoppe in New Orleans, our dairy requires a minimum delivery of two cases of nine half-gallon jugs. When using Vanilla Ice milk it ties up valuable refrigerator space to store the products. Vanilla Ice Milk also has a two week shelf life. If not used within that time frame, it will result in a lot of waste, which means losing money.

Evaporated Milk is another option to make cream flavors. Evaporated Milk can be bought from your local grocery store. One of the issues with using Evaporated milk is it can sometimes retain the metallic taste of the can which can affect the taste of your snoball cream flavors. Plus, most evaporated milk containers only come in 12oz containers, at around $1.00 each. To make one gallon of cream flavor, it would take 2- 12oz cans of Evaporated Milk. Making cream flavors with canned Evaporated Milk can be very expensive, which will affect your overall profits.

Frostline is a valuable choice to use in your cream flavors because it is cost effective. It costs $0.04 per ounce for the Frostline soft serve mix when mixed with water. When using 24oz of cream flavor to make one gallon of cream flavor, it will only cost $0.96. Using Vanilla Ice Milk it would cost $1.20 and Evaporated milk would cost $1.96. Frostline® will save you between $0.24 and $1.00 per gallon. Using Frostline would not only save you money per gallon but it also increases your profits as compared to the other cream flavors available.

Frostline® offers a delicious fresh taste and creamy texture that your customers will enjoy at a fraction of the cost of other cream products. Less cost equals more profit. Enjoy a delicious cream snoball today using Frostline® soft serve mix today!

	24 oz Cream Flavor in a Gallon	6 oz Cream Flavor in a Quart
Frostline®	$0.96	$0.24
Vanilla Ice Milk	$1.20	$0.30
Carnation Evaporated Milk	$1.96	$0.49

Cream Flavor Cost Comparison

© Copyright 2014. SnoWizard®, Inc. 101 River Road New Orleans, LA 70121 1-800-366-9766 www.snowizard.com

SINCE 1936 SnoWizard® INC.

0 14147 10166 7

Recipe Contest Entries

Georgia Delight
1/3 oz. Georgia Peach
1/3 oz. French Vanilla
1/3 oz. Strawberry
Do not mix together; instead, pour in stripes

Bahama Mama
1 oz. Wine Cooler
1 oz. Strawberry
1 oz. Banana
1 oz. Dreamcicle

Purple-saurus Rex
2 oz. Blue Bubble Gum
2 oz. Grape
Top with candy cake dinosaurs

Lemon Meringue Pie
2 ½ oz. Lemon
12 oz. Ice Milk
Pour Lemon extract & ice milk into ½ Gallon. Fill Remainder with simple syrup. Keep refrigerated

K'Hawaiian
☆**Contest Winner**
2 ½ oz. Kiwi
2 oz. Blue Hawaiian

Spiced Apple
☆**Contest Winner**
Pour Granny Smith Apple down the center, and Cajun Red Hot® around the perimeter.

Pineapple Fluff
☆**Contest Winner**
Pour pineapple cream flavoring on snow. Put a few swirls of whipped cream and a ladle of crushed pineapple on top and mix with a spoon. Finish with snow and more syrup, & top with whipped cream.

Frog in a Blender
☆**Contest Winner**
Pour Watermelon syrup in center only. Pour lime syrup around the outer edge.

Ocean Mist
☆**Contest Winner**
2 oz. Pina Colada
1 oz. Lemon Lime
1 oz. Blue Coconut

Strawberry Blast
☆**Contest Winner**
Puree strawberries. Put 1 oz. portion in bottom of 16 oz. cup and cover with whipped cream. Fill cup with snow and flavor with Wild Strawberry Cream & Vanilla Cream flavors. Top with more strawberry puree & garnish with whipped cream & a few more sliced strawberries.

Polynesian Pineapple
☆**Contest Winner**
1/3 oz. Pineapple
1/3 oz. Strawberry
1/3 oz. Creamy Coconut
Add simple syrup & garnish with fresh pineapple & cherry.

Tropical Sunshine
☆**Contest Winner**
½ oz. Tangerine
½ oz. Coconut
Garnish with orange & cherry

Bird of Paradise
2 oz. Pina Colada
1 oz. Mango
1 oz. Banana

French Kiss
2 oz. Guava
2 oz. White Coconut

Muddy Sneakers
2 oz. Banana
2 oz. Hazelnut
Add a splash of coffee

Godzilla on Ice
2 oz. Margarita
2 oz. Grape
1 oz. Citric Acid

Dragon's Blood
☆**Contest Winner**
2 oz. Tiger's Blood
2 oz. Granny Smith Apple

Toxic Waste
2 oz. Pink Bubble Gum
2 oz. Granny Smith Apple

Cactus Juice
☆**Contest Winner**
1 oz. Margarita
1 oz. Pineapple
1 oz. Orange
1 oz. Blueberry

A Dilly Surprise
Add a pickle & cover with snow and dill flavor.

Wango Tango
☆**Contest Winner**
2 oz. Pina Colada
1 oz. Pineapple
1 oz. Margarita

After Dinner Mint
2 oz. Buttercream
2 oz. Peppermint

Party Mint
☆**Contest Winner**
2 oz. Spearmint
2 oz. Peppermint

Dinosaur Egg
☆**Contest Winner**
Pour Mango all over, then take Blueberry & pour 3 or 4 spots.

Monster Mash
1 oz. Grape
1 oz. Blueberry
1 oz. Pineapple
1 oz. Granny Smith Apple

Tropical Hurricane
2 oz. Tropics
2 oz. Hurricane

© Copyright 2014. SnoWizard®, Inc. 101 River Road New Orleans, LA 70121 1-800-366-9766 www.snowizard.com

SINCE 1936 SnoWizard® INC.

Contest Recipes continued

Starfrost
2 oz. Peppermint
2 oz. Almond
8 drops Blue Coconut for color

Dragon's Brew
1 1/3 oz. Pina Colada
1 1/3 oz. Pink Champagne
1 1/3 oz. Margarita

Bananarama
2 oz. Banana
2 oz. Strawberry Cheesecake

Barney
2 oz. Cotton Candy
2 oz. Blue Bubble Gum

E.T.
2 oz. Vanilla
2 oz. Ice Cream

Coo Coo for Coconut
2 oz. Creamy Coconut
2 oz. Blue Coconut
Top with cream!

The Flag
☆Contest Winner
Pour a stripe of Pina Colada down the middle of the SnoBall, then pour a stripe of Bubble Gum down one side and a stripe of Tutti Frutti down the other.

Bloody Mary
☆Contest Winner
Pour Margarita around the edge of the SnoBall, then pour Tiger's Blood around the top.

Pink Flamingo
☆Contest Winner
2 oz. Coconut
2 oz. Nectar
Great as a cream flavor!

Root Beer Float
☆Contest Winner
3 oz. Root Beer
1 oz. Ice Cream

Tropical Sunrise
1 oz. Pineapple
1 oz. Banana
1 oz. Georgia Peach
1 oz. Orange

Birch Beer
2 oz. Root Beer
2 oz. Cajun Red Hot®

Ninja
2 oz. Popeye
2 oz. Ice Cream

Garfield
2 oz. Orange
2 oz. Grape

Plum Crazy
2 oz. Daiquiri
2 oz. Plum

Apple Pie a la Mode
3 ½ oz. Golden Apple
¼ oz. Cinnamon
½ oz. Ice Cream
24 oz. Evaporated Milk
Mix in gallon jug, and fill with simple syrup. Fill cup with snow, but only to the rim. Pour syrup over the snow, then top with a portion of Apple Pie. Add a scoop of ice cream and sprinkle with cinnamon & sugar.

Banana Split
☆Contest Winner
Pour equal amounts of Ice Cream and Banana flavors to cover the snoball. Then use Chocolate and Cherry to make two stripes across the top.

Lemon Pie
☆Contest Winner
Punch a hole in the center of the snow with a straw. Pour Coconut Cream around the edge of the cup and Lemon down the center. Place a large dollop of lemon pie filling on top & sprinkle with toasted coconut.

Jamaican Man
2 oz. Coconut
2 oz. Banana
Teaspoon Strawberry

Berry Wine Cooler
2 oz. Wine Cooler
1 oz. Blackberry
½ oz. Raspberry
½ oz. Blueberry

Almond Joy
2 oz. Chocolate
1 ½ oz. Toasted Coconut
½ oz. Almond

Mounds
2 oz. Chocolate
2 oz. Creamy Coconut

Superman
2 oz. Tiger's Blood
2 oz. Dreamsicle

Tazmanian Devil
☆Contest Winner
Pour Bubble Gum around the outside of the snoball, then pour Cajun Red Hot down the center. The amounts should be roughly even.

Rockberry Lemonade
☆Contest Winner
3 oz. Lemon
1 oz. Raspberry
1 oz. Citric Acid

Tootsy Roll
☆Contest Winner
Fill your cup 1/3 with snow and then pour chocolate cream flavor. Fill another 1/3 and pour on cherry. Then, on the final layer of ice, pour chocolate cream and cherry.

Power Ranger Punch
2 oz. Cherry
2 oz. Banana

© Copyright 2014. SnoWizard®, Inc. 101 River Road New Orleans, LA 70121 1-800-366-9766 www.snowizard.com

SINCE 1936 SnoWizard® INC.

Nobody beats the Wiz®

2026 Flavor of the Week

Every week, SnoWizard® features one of its many famous flavoring concentrates at a reduced price.

Gallons $30.00 Quarts $9.50

Dec 28	to	Jan 03	Strawberry Shortcake
Jan 04	to	Jan 10	Ice Cream
Jan 11	to	Jan 17	Bubble Gum
Jan 18	to	Jan 24	Coconut
Jan 25	to	Jan 31	Tiger's Blood
Feb 01	to	Feb 07	Mango
Feb 08	to	Feb 14	Pina Colada
Feb 15	to	Feb 21	Watermelon
Feb 22	to	Feb 28	Blue Raspberry
Mar 01	to	Mar 07	Pineapple
Mar 08	to	Mar 14	Grape
Mar 15	to	Mar 21	Banana
Mar 22	to	Mar 28	Lime
Mar 29	to	Apr 04	Blueberry
Apr 05	to	Apr 11	Dreamsicle
Apr 12	to	Apr 18	Clearly Bubble Gum
Apr 19	to	Apr 25	Black Cherry
Apr 26	to	May 02	Toasted Marshmallow
May 03	to	May 09	Nectar
May 10	to	May 16	Creamy Coconut
May 17	to	May 23	Vanilla
May 24	to	May 30	Kiwi
May 31	to	Jun 06	Clearly Strawberry
Jun 07	to	Jun 13	Leche
Jun 14	to	Jun 20	Root Beer
Jun 21	to	Jun 27	Wild Strawberry
Jun 28	to	Jul 04	Lemon-Lime
Jul 05	to	Jul 11	Blackberry
Jul 12	to	Jul 18	Pink Lemonade
Jul 19	to	Jul 25	Chocolate
Jul 26	to	Aug 01	Tutti Frutti
Aug 02	to	Aug 08	Blue Cotton Candy
Aug 09	to	Aug 15	Red Velvet Cake
Aug 16	to	Aug 22	Bahama Mama
Aug 23	to	Aug 29	Cake Batter
Aug 30	to	Sept 05	Orange
Sept 06	to	Sept 12	Cotton Candy
Sept 13	to	Sept 19	Spearmint
Sept 20	to	Sept 26	Lemonade
Sept 27	to	Oct 03	Pink Bubble Gum
Oct 04	to	Oct 10	Cherry
Oct 11	to	Oct 17	Silver Fox
Oct 18	to	Oct 24	Blue Coconut
Oct 25	to	Oct 31	Georgia Peach
Nov 01	to	Nov 07	Margarita
Nov 08	to	Nov 14	Strawberry
Nov 15	to	Nov 21	Granny Smith Apple
Nov 22	to	Nov 28	Blue Hawaiian
Nov 29	to	Dec 05	Wild Cherry
Dec 06	to	Dec 12	Wedding Cake
Dec 13	to	Dec 19	Strawberry Cheesecake
Dec 20	to	Dec 26	Lemon
Dec 27	to	Jan 02	Raspberry

TOP 20 NATIONAL SELLING FLAVORS OF 2025

1. *Strawberry*
2. *Tiger's Blood*
3. *Blue Raspberry*
4. *Cherry*
5. *Wedding Cake*
6. *Bubble Gum*
7. *Pina Colada*
8. *Blue Coconut*
9. *Banana*
10. *Coconut*
11. *Watermelon*
12. *Ice Cream*
13. *Granny Smith Apple*
14. *Mango*
15. *Pineapple*
16. *Strawberry Cheesecake*
17. *Grape*
18. *Blue Cotton Candy*
19. *Cotton Candy*
20. *Georgia Peach*

To Order, Call Toll-Free 1-800-366-9766

SnoWizard, Inc. 101 River Road • New Orleans, Louisiana 70121 • www.snowizard.com

SINCE 1936 SnoWizard® INC.

Nobody beats the Wiz®

REQUIREMENTS FOR REDEMPTION OF SNOPOINTS™

SnoWizard® flavoring concentrates feature valuable SnoPoints™! Quart sizes have 15 SnoPoints™ and gallon sizes have 40 SnoPoints™. Redeem 400 points for a free quart of extract and 1000 points for a free gallon of extract. SnoPoints™ cannot be applied toward any other products.

SnoPoints™ must be sent in **prior to the order in which they are to apply**. A minimum, paid purchase of $25.00 must be ordered before the SnoPoints™ can be used. The minimum purchase cannot include items redeemed by the SnoPoints™. We do not keep track of the SnoPoints™ on your purchases.

The following guidelines must be followed to obtain redemption of your SnoPoints™.

1. Only that portion of the label that is imprinted with the SnoPoints™ is to be returned.
2. SnoPoints™ must be applied in rows onto a sheet of loose-leaf paper.
   (Quart and gallon SnoPoints™ should be kept separate.)
3. A total should be made to the right of each row.
   A grand total should be made in the bottom right hand portion of the page.
4. Your account number, name, address and phone number must be written on each page.
5. Loose SnoPoints™ will not be accepted and will be returned.
6. SnoPoints™ apply to redemption of flavorings only and do not include packaging, shipping and handling charges.
7. Please send SnoPoints™ in groups of 400 or 1000 or any combination thereof. For example:

ROW TOTAL: 200

ROW TOTAL: 200

GRAND TOTAL: 400

SnoPoints™ are to be mailed to:

SnoWizard, Inc.
101 River Road
New Orleans, LA 70121

We recommend that you remove the SnoPoints™ from your plastic containers as soon as you receive your shipment. The glue on the labels is removable for a certain period of time. The longer the label is on the container, the harder it will be to remove. We suggest that you scribe around the SnoPoint™ portion of the label with a razor knife to remove it. Press the SnoPoint™ on a sheet of loose-leaf paper at that time. No glue should be required.

Redemption of SnoPoints™ is limited to retail purchases only and is not available to wholesalers or distributors.

© Copyright 2014. SnoWizard®, Inc. ● 101 River Road New Orleans, LA 70121 ● 1-800-366-9766 ● www.snowizard.com

SPECIFICATIONS:

Height: 28"

Depth: 14"

Width: 33"; (with ratchet bar extended: 52")

Drip Pan: 35" wide x 25" deep x 5" high

Recommended counter size: 36" wide x 26" deep (for extra work/ materials area: 66" wide x 26" deep)

Motor: 1725RPM, 115V, 1/2 HP, CCW. 115 Volt, 60hz, Single phase, 8.8 Amps.

Available Options: 12 Volt DC and 220 Volt AC.

Belt: FHP V-Belt, 38" outside length.

Large pulley: OD: 8" 5/8 bore.

Small pulley: OD: 2.5" 5/8 bore.

Lubricant: USDA waterproof Foodservice Grease.

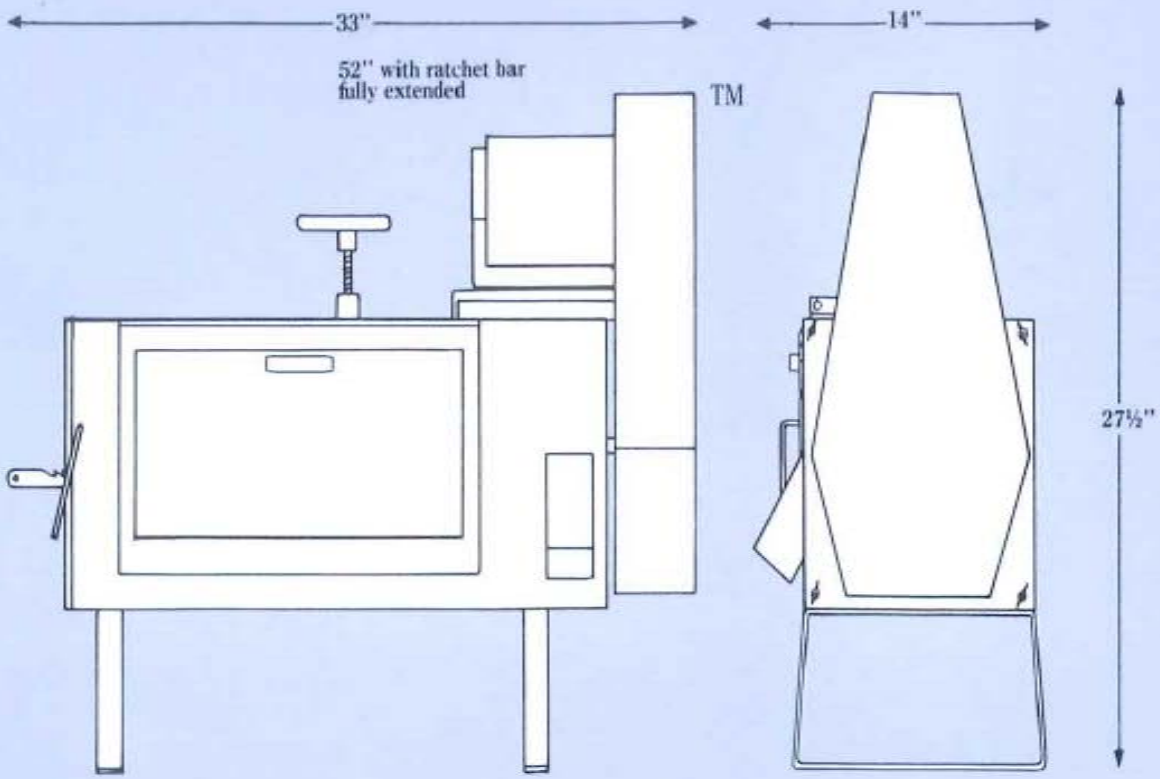

Cutting blades: hardened, high carbon stainless steel, anti-corrosive.

Construction: Unibody welded.

Recommended ice size: 5.5" square x 15" long (12.5 pounds).

Maximum ice size: 6" x 6" x 15" long (15 pounds).

Actual Weight: 100 Lbs.

Shipping Weight: 110 Lbs.